Data in Brief 65 (2026) 112596

Contents lists available at ScienceDirect

Data in Brief

journal homepage: www.elsevier.com/locate/dib

Data Article

EEG and EMG dataset for analyzing movement-related cortical potentials in hand gesture tasks

Fernanda Reyes-Jiménez[a], Fernanda Rosas-Agraz[a,b], Eduardo Macias-Naranjo[a], Francisco J. Alvarado-Rodríguez[b], Hugo Vélez-Pérez[a], Rebeca Romo-Vázquez[a], Erick Guzmán-Quezada[b,*]

[a] *Departamento de Bioingeniería Traslacional, Centro Universitario de Ciencias Exactas e Ingenierías, Universidad de Guadalajara, Guadalajara, Jalisco, Mexico*
[b] *Departamento de Electromecánica, Universidad Autónoma de Guadalajara, Guadalajara, Jalisco, Mexico*

ARTICLE INFO

Article history:
Received 17 October 2025
Revised 27 November 2025
Accepted 10 February 2026
Available online 17 February 2026

Dataset link: EEG and EMG Dataset for Analyzing Movement-Related Cortical Potentials in Hand Gesture Tasks (Original data)

Keywords:
BCI
EEG-based prosthetics
Hand gesture analysis
MRCP
Neural signal processing
Machine learning for neurorehabilitation

ABSTRACT

This dataset contains electroencephalography (EEG) and electromyography (EMG) recordings acquired during the execution of specific motor tasks aimed at eliciting movement-related cortical potentials (MRCP). The goal is to provide an accessible resource for research in brain–computer interfaces (BCI), neurorehabilitation, and EEG-based prosthetic control.
Data were collected from 40 healthy participants aged 18–30 years across five sessions, each comprising ten right-hand fist closure movements, guided by a custom Python-based visual interface. EEG signals were recorded using a 32-channel EMOTIV Flex 2 wireless system following the international 10–10 system, with a sampling rate of 128 Hz and electrode placement focused on the central cortical areas. All recordings, including raw EEG, raw EMG, and event triggers synchronized with the visual interface, were stored in .CSV format.
To demonstrate that the EEG recordings in the dataset contain sufficient low-frequency information for MRCP analysis, we applied a standard preprocessing pipeline consisting of a common average reference (CAR), a Anti-Laplacian spatial fil-

* Corresponding author.
E-mail address: erick.guzman@edu.uag.mx (E. Guzmán-Quezada).

https://doi.org/10.1016/j.dib.2026.112596
2352-3409/© 2026 The Author(s). Published by Elsevier Inc. This is an open access article under the CC BY-NC license (http://creativecommons.org/licenses/by-nc/4.0/)

ter, and a 0.1–1 Hz Butterworth band-pass filter. This procedure was used only for internal validation, allowing us to visualize the expected MRCP components from the nine motor-related electrodes.
It is important to emphasize that these processed signals are not included in the database.
The public dataset contains only the raw EEG and EMG recordings, so that users may apply their preferred preprocessing and analysis methods.
The dataset was collected under controlled laboratory conditions at the Medical Devices Laboratory, Universidad Autónoma de Guadalajara, and represents a valuable contribution to the understanding and application of MRCP in BCI research.

© 2026 The Author(s). Published by Elsevier Inc.
This is an open access article under the CC BY-NC license (http://creativecommons.org/licenses/by-nc/4.0/)

Specifications Table

Subject	Biomedical Engineering, Neuroscience, Signal Processing.
Specific subject area	Brain-computer interfaces (BCI), Human-computer interaction, Neurophysiological signal analysis.
Type of data	Data format: Raw Type of data: EEG Signal, EMG Signal, Event Markers.
Data collection	Data was collected in a controlled laboratory environment using a 32-channel wireless EEG system (FLEX 2 Saline, EMOTIV) equipped with 34 electrodes—32 for recording and 2 for reference. Recording electrodes were positioned according to the international 10–10 system at the following sites: AF3, AF4, F3, F1, Fz, F2, F4, FC3, FC1, FCz, FC2, FC4, C3, C1, Cz, C2, C4, CP3, CP1, CP2, CP4, P3, P1, Pz, P2, P4, PO3, Poz, PO4, O1, and O2. Reference electrodes, Drive Right Leg (DRL) and Common Mode Sense (CMS), were placed at TP9 and TP10, respectively. The system provided 16-bit resolution (1 LSB = 0.51 μV) and a sampling rate of 128 Hz. EMOTIV Launcher software was used for electrode synchronization, and EMOTIV PRO was employed to verify signal quality. For EMG signal acquisition, the electrodes were positioned by palpating the flexor carpi radialis and palmaris longus muscles, which are primarily responsible for fist closure. A standard inter-electrode distance of 5 cm was maintained to ensure uniform recording conditions across all participants. The reference electrode was placed over a bony prominence near the elbow. EMG signals were digitized at a sampling rate of 440 Hz. All participants in this study signed an informed consent form, which ensured that participants fully understood the study conditions and agreed to participate voluntarily. This document also stated that the collected data would be treated confidentially and not shared without explicit authorization. All participants included in the study were right-handed. Consequently, participants with neurological disorders or a history of injury to the right-handed. were excluded from the study.
Data source location	Medical Devices and Gait Analysis Laboratory, Universidad Autónoma de Guadalajara, Zapopan, Jalisco, Mexico.
Data accessibility	Repository name: Mendeley Data Data identification number: DOI: 10.17632/y23s2xg6x4.1 Direct URL to data: https://data.mendeley.com/datasets/y23s2xg6x4/1
Related research article	Guzmán-Quezada, E., Lomeli-Garcia, S., Velazco-Garcia, J., Jonguitud-Ceballos, M., Vega-Martinez, A., Ojeda-Galvan, J., … & Reyes-Jiménez, F. (2024). Development of an Electromyography Signal Acquisition Prototype and Statistical Validation Against a Commercial Device. Sensors, 24(21), 6787.

1. Value of the Data

- These data help in understanding brain activation patterns related to specific movements, such as right-hand fist clenching, providing a unique resource for the study of paradigms within BCI, known as movement-related cortical potential (MRCP). Moreover, their reuse in the development of EEG-controlled prostheses and in neurorehabilitation applications opens new possibilities for the design of assistive technologies and advanced therapies. **Comprehensive MRCP dataset**: This dataset contains simultaneous EEG and EMG recordings acquired during right-hand fist closure tasks, specifically designed to elicit movement-related cortical potentials (MRCP). All recorded participants were right-handed, ensuring consistency in dominant hand activation. Data were collected under controlled laboratory conditions using a 32-channel wireless EEG system with standardized electrode placement (10–10 system) and synchronized bipolar EMG from forearm muscles. The inclusion of both neural and muscular activity allows multi-modal analysis, enabling studies on neural–muscular coordination, motor preparation, and movement execution patterns.
- **Proven research applicability**: Portions of this dataset have already been applied in peer-reviewed studies, including *Sensors* (EMG-based prosthetic control) and CNIB 2024 (MRCP-based mental fatigue detection). This demonstrates the versatility of the recordings for different application domains, such as BCI algorithm validation, clinical research, and assistive technology development. The dataset's documented use in multiple contexts confirms its potential for cross-disciplinary research and supports its adoption by the scientific community.
- **Precise event synchronization**: Each trial includes multiple time-stamped event triggers that mark preparation, movement onset, and completion phases. This high-resolution temporal annotation allows researchers to align EEG and EMG signals with experimental cues, enabling precise segmentation of motor-related activity. Such detailed synchronization is challenging to obtain in publicly available datasets, making this resource particularly valuable for studies on reaction times, movement anticipation, and neural signal alignment with external stimuli.
- **Machine learning readiness**: With 5 sessions of 10 trials per participant, the dataset is highly suitable for training and benchmarking algorithms. Validation results demonstrate that applying preprocessing pipelines such as common average reference (CAR), surface Laplacian, and 0.1–1 Hz Butterworth band-pass filters yields distinct MRCP features. Researchers can use these raw signals to develop custom movement detection and classification models, test noise reduction strategies, and explore feature engineering methods for BCI applications, rehabilitation systems, and prosthetic control.
- **Supports reproducibility and longitudinal analysis**: Multiple sessions per subject enable the study of signal stability, intra-subject variability, and longitudinal changes in MRCP characteristics. The open-access format and standardized documentation facilitate reproducibility, allowing other researchers to replicate experimental conditions, validate findings, and perform meta-analyses. This structure also supports collaborative work across institutions, enabling dataset fusion with other BCI-related resources for expanded research possibilities in neuroscience, rehabilitation engineering, and biomedical signal processing.

2. Background

The movement-related cortical potentials (MRCP) play an important role in innovative applications such as brain–computer interfaces (BCI) and neurorehabilitation. These cortical potentials reflect brain activity associated with the planning and execution of motor tasks, both physical and imagined. Previous studies have emphasized their relevance for understanding cognitive and motor processes, as well as for developing communication and control tools for patients with severe paralysis [1].

The present dataset extends previous work from our group, where the EMG acquisition system was validated against a commercial device and applied in prosthetic control studies [2].

A subset of the data was also used to investigate mental fatigue detection in MRCP signals, as reported in the proceedings of CNIB 2024 [3].

Recordings were performed with a 32-channel EMOTIV wireless EEG system, following the international 10–10 system, with electrode placement focused on central cortical regions to capture motor activity. Each participant completed five sessions of ten right-hand fist closures, generating a structured resource suitable for MRCP analysis. To ensure signal quality during the validation analysis, preprocessing techniques including common average reference (CAR), surface Laplacian, and Butterworth band-pass filtering (0.1–1 Hz) were applied, following recommendations from previous MRCP research [4–7].

3. Data Description

The dataset contains synchronized electroencephalography (EEG) and electromyography (EMG) recordings acquired while participants performed right-hand fist closure tasks. A custom visual interface guided the execution of each trial, providing precise cues for movement onset, duration, and termination. In total, 40 healthy participants without reported neuromotor impairments contributed to the dataset.

Each participant completed five experimental sessions. Within each session, subjects performed ten trials of right-hand fist closure and ten resting periods. The visual interface, projected on a screen, displayed a gradually filling green arrow to indicate the execution phase. After each trial, a one-second pause was included before the next repetition, ensuring consistency across recordings.

The dataset is structured into a main directory, which contains both supporting documentation and participant folders:

- **EEG_EMOTIV.pdf**: schematic representation of EEG electrode placement according to the international 10–10 system.
- **EMG_Placement.pdf**: diagram illustrating the forearm electrode placement used for EMG acquisition.
- **Consent.pdf**: example of the informed consent form provided to participants.

The dataset is structured into a main directory, which contains both supporting documentation and participant folders. Each **participant folder** is uniquely labeled (e.g., SUBJECT01 to SUBJECT40). Inside each folder, raw, unprocessed data are stored in CSV format, organized by trial and modality:

- File names follow the convention: SUBJECTXX_Session_0X_EEG.csv and SUBJECTXX_Session_0X_EMG.csv.
- EEG data files
  - Columns: Each column corresponds to a specific channel following the 10–10 system.
  - Units: Values represent raw voltage amplitude in microvolts ().
  - Rows: Each row represents a time sample recorded at a sampling rate of 128 Hz.
- Event Markers: Specific columns (labeled Trigger) contain the synchronized integer codes (771, 7711,7712) marking the experimental phases.
- EMG data f
  - Columns: contains the raw signal from the bipolar forearm configuration.
  - Units: Values represent raw analog-to-digital converted (ADC) units, recorded at 440 Hz.
  - Synchronization: Includes a copy of the event triggers to ensure precise alignment with the EEG stream.
- Event markers (triggers) are embedded in the files to align movement preparation, execution, and rest periods with the corresponding neural and muscular activity.

Note: No digital filtering or artifact removal has been applied to these CSV files. The preprocessing steps described in the “Materials and Methods” section describe the methodology used

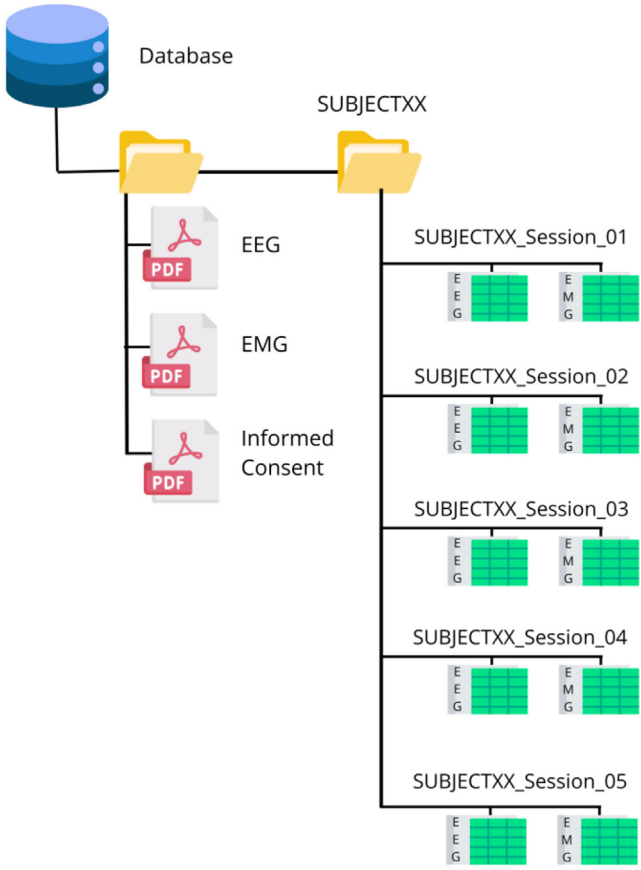

Fig. 1. Each participant folder (SUBJETXX) contains five session subfolders (SUBJECTXX_Session_01 to SUBJECTXX_Session_05). Each session includes two CSV files (EEG and EMG). Supporting documents (EEG electrode map, EMG placement diagram) are stored in the main directory.

by the authors to generate the validation figures (Fig. 6), but users are provided with the raw signals to allow for independent analysis pipelines.

This systematic organization ensures that users can easily navigate the dataset, identify Sessions, and reproduce the experimental timeline. The inclusion of supporting documents facilitates the replication of the electrode setup and provides the ethical framework for data collection (Fig. 1).

4. Experimental Design, Materials and Methods

4.1. Participants

A total of 40 healthy adult volunteers (20 females and 20 males), aged between 18 and 30 years, were recruited for this study. All participants were right-handed, reported no history of neurological, psychiatric, or musculoskeletal disorders, and did not present any upper-limb impairments that could affect task execution. Individuals with a history of hand or wrist injury, neurological disease, or conditions affecting movement control were excluded from participation.

To ensure homogeneous data acquisition conditions, participants were instructed to maintain regular sleep habits and to sleep between six and eight hours the night before the experimental session. They were also asked to refrain from consuming caffeine or other stimulants for at least two hours prior to the recordings. These measures were taken to minimize sources of variability such as fatigue, drowsiness, or elevated arousal that could interfere with cortical or muscular activity.

On the day of the experiment, participants were advised to arrive with clean, dry hair and to avoid the use of hair products such as gel, wax, or spray, in order to optimize scalp–electrode conductivity and reduce impedance. All individuals confirmed that they had not participated in previous brain–computer interface (BCI) or EEG/EMG experiments, ensuring that the dataset would not be biased by learning effects or prior exposure to similar protocols.

Before participation, each subject was informed in detail about the procedures and the type of data to be collected. Written informed consent was obtained from all participants, who also received a copy of the signed document. The study was conducted in accordance with the Declaration of Helsinki, and all experimental procedures were reviewed and approved by the Ethics Committee of the Universidad Autónoma de Ciudad Juárez (Ciudad Juárez, Chihuahua, Mexico), under protocol number **CEI-2025–1–77**.

4.2. Electroencephalography (EEG)

EEG signals were recorded using a 32-channel wireless system (FLEX 2 Saline, EMOTIV), equipped with 34 electrodes in total: 32 electrodes dedicated to signal acquisition and 2 reference electrodes. Electrode placement followed the international 10–10 system, ensuring adequate spatial resolution for detecting motor-related cortical activity. The active electrodes covered frontal, central, parietal, occipital, and prefrontal regions, with particular emphasis on the sensorimotor cortex. The following positions were used: AFE, AF4, F3, F1, Fz, F2, F4, FC3, FC1, FCz, FC2, FC4, C3, C1, Cz, C2, C4, CP3, CP1, CP2, CP4, P3, P1, Pz, P2, P4, PO3, POz, PO4, O1, and O2. Reference electrodes consisted of DRL (Drive Right Leg) and CMS (Common Mode Sense), placed at TP9 and TP10, respectively, to improve common-mode rejection and minimize noise artifacts.

The EEG device provided a 16-bit resolution, with 1 least significant bit corresponding to 0.51 μV, and a sampling rate of 128 Hz. This resolution was sufficient to capture the slow cortical potentials associated with movement-related cortical potentials (MRCP) [8,9], while ensuring a balance between data quality and storage requirements for large-scale acquisition. Data transmission occurred via a wireless link, allowing participants to perform motor tasks comfortably without restrictions imposed by wired connections.

Prior to each session, electrode contacts were visually inspected and adjusted to ensure stable skin–electrode impedance. Participants were asked to remain seated in an upright position, minimizing head movement, and to avoid speaking during the recording period. These measures were implemented to reduce artifacts from eye blinks, facial muscles, and body motion. The EMOTIV Launcher software was used for real-time electrode synchronization and impedance monitoring, while EMOTIV PRO was employed to validate that all channels were properly detecting signals before initiating the experimental session.

Access to raw EEG signals was provided through the EMOTIV Cortex API. The API streams data in JavaScript Object Notation (JSON) format via WebSockets, ensuring compatibility with multiple programming languages, including Python and MATLAB. This feature facilitated integration with custom-developed visual interfaces and data analysis pipelines. The ability to interface with the API ensured that raw EEG data could be exported directly into .CSV format while preserving time stamps and event markers.

A graphical representation of the electrode layout is shown in Fig. 2. In this diagram, electrodes are highlighted in red, positions not used in this configuration are displayed in white, and the reference electrodes (DRL and CMS) are indicated in yellow. This configuration allowed for optimal spatial coverage of cortical regions relevant to motor task execution.

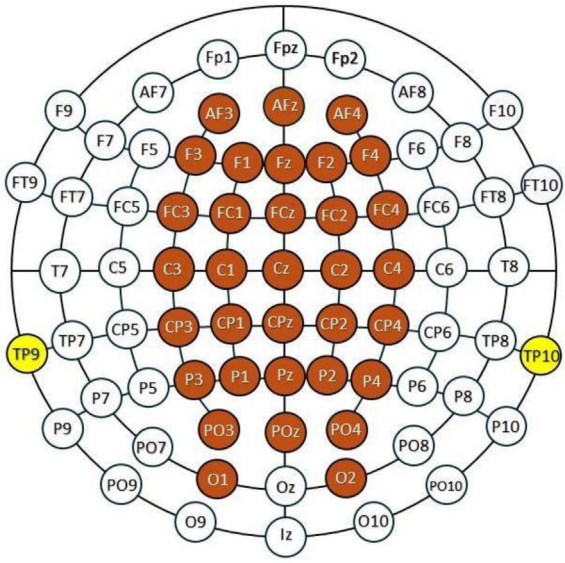

Fig. 2. Arrangement of the 32 EEG recording electrodes (red) and 2 reference electrodes (gray, DRL and CMS) according to the international 10–10 system. Unused positions are shown in white.

4.3. Electromyography (EMG)

Electromyographic activity was recorded using a custom single-channel multimodal acquisition board with bipolar input. The design and validation of this prototype system has been reported in detail by Guzmán-Quezada et al. [2],

The hardware was based on an INA128 instrumentation amplifier, followed by analog filters designed to optimize EMG signal quality. The circuit included a high-pass filter (20 Hz) to remove low-frequency motion artifacts, a low-pass filter (330 Hz) to preserve the bandwidth of the EMG signal, and a notch filter at 60 Hz to reduce power line interference.

Surface Ag/AgCl electrodes were placed on the dominant forearm of each participant in a bipolar configuration. Electrode positioning was determined by palpation of the flexor carpi radialis and palmaris longus muscles during isometric fist closure to locate the muscle belly. The active recording pair was oriented longitudinally along the muscle fibers., which are primarily involved in fist closure. EMG signals were recorded at a sampling frequency of 440 Hz. A standard inter-electrode distance of 5 cm was maintained.. A reference electrode was placed over a genuinely electrically neutral bony landmark, specifically the olecranon process of the ulna (elbow), to, minimizing motion artifacts and improving signal stability.

Signal acquisition was performed in synchrony with EEG recordings, ensuring precise alignment of neural and muscular activity. Event triggers marking the onset and termination of motor tasks were embedded in the data, allowing researchers to directly link cortical potentials with peripheral muscle activity.

Fig. 3 illustrates the precise anatomical locations of the recording and reference electrodes relative to the underlying forearm musculature.

4.4. Signal acquisition and experimental procedure

All experiments were conducted in an isolated room within the Medical Devices and Gait Analysis Laboratory, Universidad Autónoma de Guadalajara, Zapopan, Jalisco, Mexico, to mini-

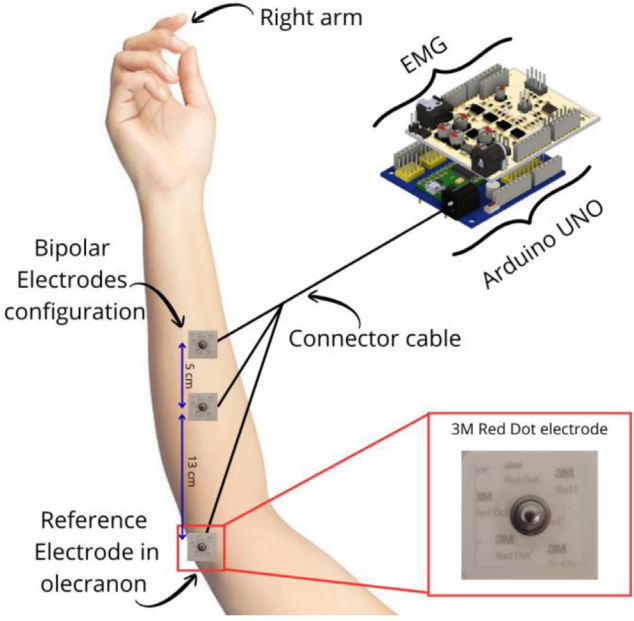

Fig. 3. Bipolar surface electrodes were positioned on the forearm over the flexor carpi radialis and palmaris longus muscles and the reference electrode was placed specifically the olecranon.

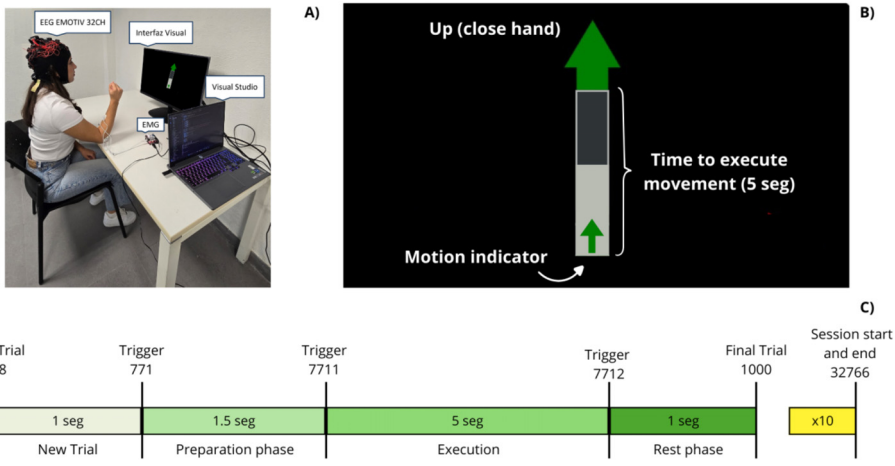

Fig. 4. (A) Participant setup during the experiment. (B) Visual interface used to guide movement execution. (C) Timeline of a single trial including preparation, execution, and rest phases.

mize external interferences and ensure optimal conditions for data acquisition. Participants were seated in an upright position with their back supported, the dominant arm resting comfortably on a table, and the elbow flexed to approximately 45° (Fig. 4A). This posture was maintained throughout the session to standardize muscle activation and reduce motion-related artifacts.

Each experimental recording lasted approximately 40–45 min. During this period, participants completed five sessions of ten trials each, consisting of right-hand fist closure and release

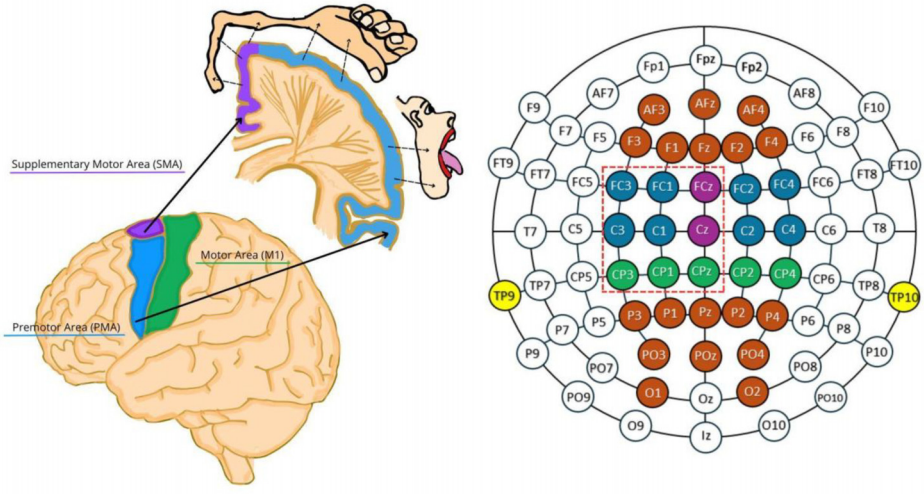

Fig. 5. Electrode locations selected for MRCP detection from EEG signals. Electrodes colored in purple correspond to the *Supplementary Motor Area* (SMA); blue electrodes represent signals from the premotor area (PMA); green electrodes correspond to the primary motor area (M1); orange electrodes indicate the remaining recorded channels, and yellow electrodes denote the reference electrodes. The nine electrodes enclosed within the red dashed square represent the subset selected for MRCP detection.

movements. Short resting intervals were provided between sessions to minimize fatigue and maintain consistent performance across trials.

Task execution was guided by a visual interface developed in Python, projected on a screen placed in front of the participant (Fig. 4B). The interface provided standardized visual cues that defined the temporal structure of each trial, consisting of three phases:

- Preparation phase (1.5 s): An anticipation cue was displayed, signaling participants to prepare for movement.
- Execution phase (5 s): A green arrow appeared on the screen, instructing participants to close their fist and maintain the contraction.
- Rest phase (1 s): The interface automatically reset before the start of the next trial.

Each trial was time-stamped and associated with an event marker (trigger) embedded in the EEG recordings, allowing precise synchronization between cortical, muscular, and stimulus-related data. This event coding ensured that motor-related cortical potentials (MRCP) could be accurately segmented and that EEG and EMG signals could be aligned for joint analysis (Fig. 4C).

To ensure proper synchronization between the visual interface and biosignal recordings, multiple event triggers were embedded in the data stream:

- 768: indicates the start of the register of trial.
- 771: indicates the start of the preparation phase (anticipation cue).
- 7711: marks the beginning of the execution phase (arrow starts filling).
- 7712: marks the end of the execution phase (arrow completely filled).
- 1000: also used to indicate the end of the trial.
- 32,766: marks the beginning and the end of each session (ten trials).

4.5. Data preprocessing

Although the publicly released dataset contains only raw EEG and EMG recordings, the authors applied a standard preprocessing pipeline to verify that the signals indeed allow clear ex-

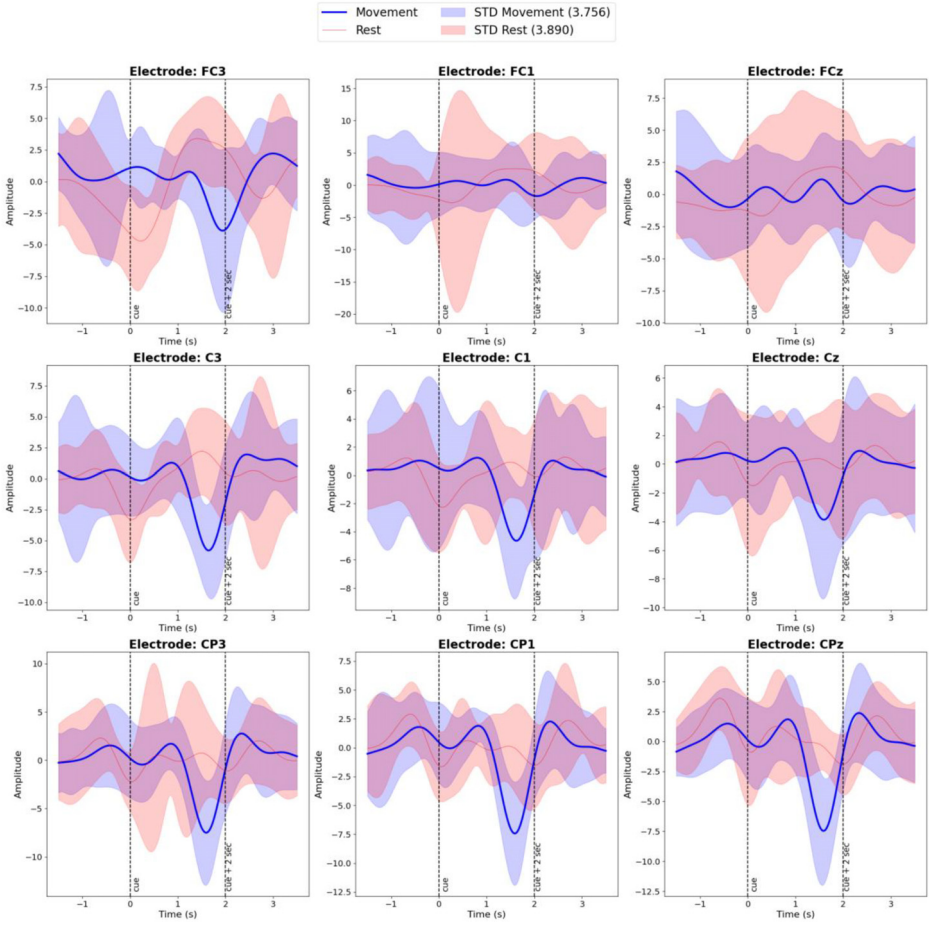

Fig. 6. Average signals of movement-related cortical potentials (MRCP) recorded from the nine electrodes of interest (FC3, FC1, FCz, C3, C1, Cz, CP3, CP1, and CPz). The blue line represents the mean activity during MRCP detection, with the blue shaded area indicating the standard deviation. The red line shows the mean during the resting phase, and the red shaded area represents its standard deviation. The first dashed line at 0 s marks the onset of MRCP identification, while the second dashed line at 2 s corresponds to the expected moment of movement execution.

traction of movement-related cortical potentials (MRCP). The following steps—CAR referencing, Anti-Laplacian spatial filtering, and band-pass filtering—were used exclusively for internal validation to demonstrate the feasibility of obtaining MRCP components from the raw data. These processed signals are not included in the database, and users are expected to apply their preferred preprocessing methods depending on their research objectives.

The preprocessing of EEG signals was performed in three main stages. First, a Common Average Reference (CAR) filter was applied to reduce the influence of noise common to all electrodes. Second, a surface Laplacian filter was implemented to enhance spatial resolution and attenuate non-local interference. Finally, a Butterworth band-pass filter with cutoff frequencies of 0.1–1 Hz was applied, isolating the slow cortical components associated with movement-related cortical potentials (MRCP). The mathematical formulations of these preprocessing steps are summarized in Table 1.

For feature extraction and MRCP analysis, a subset of nine electrodes was selected: FC3, FC1, FCz, C3, C1, Cz, CP3, CP1, and CPz, which can be identified within the red box in Fig. 5. These

Table 1
Mathematical expressions applied during EEG preprocessing. The table summarizes the formulas used for the Common Average Reference (CAR), Anti-Laplacian, and Butterworth band-pass filters implemented to reduce noise, enhance spatial resolution, and isolate low-frequency components associated with MRCPs.

Name of the equation	Equation
A) Common Average Reference (CAR) Filter	$V_{CAR}(i) = V(i) - \frac{1}{N}\sum_{j=1}^{N} V(j)$
B) Anti-Laplacian spatial filter	$V_L(i) = V(i) + \frac{1}{N}\sum_{j \epsilon vecinos(i)} V(j)$
C) Butterworth Band-Pass Filter	$H_{BP}(S) = K_{PB}\frac{\beta s}{s^2 + \beta s + \omega_0^2}$

electrodes are located over the motor cortex and surrounding areas, including the primary motor cortex (M1), the supplementary motor area (SMA), and the premotor area (PMA). This region-specific selection ensured optimal detection of movement-related activity while reducing computational complexity.

A schematic representation of the electrode subset used for MRCP analysis is shown in Fig. 5.

4.6. Expected results

Once the participants' recordings are obtained, the MRCP signal is expected to be identified in the nine electrodes of interest, as shown in Fig. 6. In this figure, the red signal corresponds to the resting condition, while the blue signal represents the movement condition, which reflects the cortical activity associated with the MRCP.

Limitations

The dataset was collected from a homogeneous population of Mexican adults aged between 18 and 30 years. Therefore, the recordings may not be representative of the general population, particularly younger or older individuals. Additionally, all participants were right-handed, which limits the applicability of the dataset for studies involving left-handed motor tasks. The experimental design was constrained to a single type of movement (right-hand fist closure), which may reduce generalizability to other motor actions. Furthermore, data were recorded under controlled laboratory conditions, which do not account for variability present in naturalistic or clinical environments.

Ethics Statement

The study was conducted in accordance with the principles of the Declaration of Helsinki. All participants were fully informed about the procedures and provided written informed consent prior to participation. The experimental protocol was reviewed and approved by the Research Ethics Committee of the Universidad Autónoma de Ciudad Juárez (Ciudad Juárez, Chihuahua, Mexico) under protocol number CEI-2025-1-77. A copy of the informed consent form has been provided in the submission.

CRediT Author Statement

Fernanda Reyes-Jiménez: Investigation, Resources, Writing – Original Draft; **Fernanda Rosas-Agraz**: Software, Formal analysis, Resources, Data curation; **Eduardo Macías-Naranjo**: Investigation, Resources; **Francisco J. Alvarado-Rodríguez**: Writing – Original Draft, Writing – Review & Editing; **Hugo Vélez-Pérez**: Supervision, Visualization, Project administration; **Rebeca**

Romo-Vázquez: Supervision, Visualization, Project administration; **Erick Guzmán-Quezada**: Conceptualization, Methodology, Software, Validation, Resources, Supervision, Project administration.

Data Availability

EEG and EMG Dataset for Analyzing Movement-Related Cortical Potentials in Hand Gesture Tasks (Original data) (Mendeley Data).

Acknowledgements

The authors would like to express their sincere gratitude to all the volunteers who participated in the data collection process. Their time and commitment were essential for the completion of this research.

This work was supported by the Secretaría de Ciencia, Humanidades, Tecnología e Innovación de México (SECIHTI), Mexico, through graduate scholarships CVU-1320139, CVU-1000532, and CVU-1270841.

Declaration of Competing Interest

The authors declare that they have no known competing financial interests or personal relationships that could have appeared to influence the work reported in this paper.

References

[1] G. Garipelli, R. Chavarriaga, J. Millán, R. del, Single trial analysis of slow cortical potentials: a study on anticipation-related potentials, J. Neural Eng. 10 (3) (2013) 036014, doi:10.1088/1741-2560/10/3/036014.

[2] E. Guzmán-Quezada, S. Lomeli-Garcia, J. Velazco-Garcia, M. Jonguitud-Ceballos, A. Vega-Martinez, J. Ojeda-Galvan, F.J. Alvarado-Rodríguez, F. Reyes-Jiménez, Development of an electromyography signal acquisition prototype and statistical validation against a commercial device, Sensors 24 (21) (2024) 6787, doi:10.3390/s24216787.

[3] E. Macias-Naranjo, F. Reyes-Jiménez, W. Pérez, L.E. Ibarra-Serna, D. Calles-Sánchez, K. Dueñas-Álvarez, E. Guzmán-Quezada, H. Vélez-Pérez, R. Romo-Vázquez, et al., Detection of mental fatigue in movement-related cortical potential, in: J. de, J.A. Flores Cuautle, et al. (Eds.), XLVII Mexican Conference On Biomedical Engineering: Proceedings of CNIB 2024, Springer, 2025, pp. 55–64, doi:10.1007/978-3-031-82126-4_6. (Vol. 2.

[4] F. Karimi, J. Kofman, N. Mrachacz-Kersting, D. Farina, N. Jiang, Detection of movement-related cortical potentials from EEG using constrained ICA for brain-computer interface applications, Front. Neurosci. 11 (2017) 356, doi:10.3389/fnins.2017.00356.

[5] J.-H. Jeong, N.-S. Kwak, C. Guan, S.-W. Lee, Decoding movement-related cortical potentials based on subject-dependent and section-wise spectral filtering, IEEE Trans. Neural Syst. Rehabil. Eng. 28 (3) (2020) 687–698, doi:10.1109/TNSRE.2020.2966826.

[6] A.M. Savic, S. Aliakbaryhosseinabadi, J.U. Blicher, D. Farina, N. Mrachacz-Kersting, S. Dosen, Online control of an assistive active glove by slow cortical signals in patients with amyotrophic lateral sclerosis, J. Neural Eng. 18 (4) (2021) 0460085, doi:10.1088/1741-2552/ac0488.

[7] B. Xu, Y. Wang, L. Deng, C. Wu, W. Zhang, H. Li, A. Song, Decoding hand movement types and kinematic information from electroencephalogram, IEEE Trans. Neural Syst. Rehabil. Eng. 29 (2021) 1744–1753, doi:10.1109/TNSRE.2021.3106897.

[8] S. Aliakbaryhosseinabadi, S. Dosen, A.M. Savić, J. Blicher, D. Farina, N. Mrachacz-Kersting, Participant-specific classifier tuning increases the performance of hand movement detection from EEG in patients with amyotrophic lateral sclerosis, J. Neural Eng. 18 (5) (2021) 056023, doi:10.1088/1741-2552/ac15e3.

[9] N. Jiang, L. Gizzi, N. Mrachacz-Kersting, K. Dremstrup, D. Farina, A brain–computer interface for single-trial detection of gait initiation from movement-related cortical potentials, Clin. Neurophysiol. 126 (1) (2015) 154–159, doi:10.1016/j.clinph.2014.05.003.